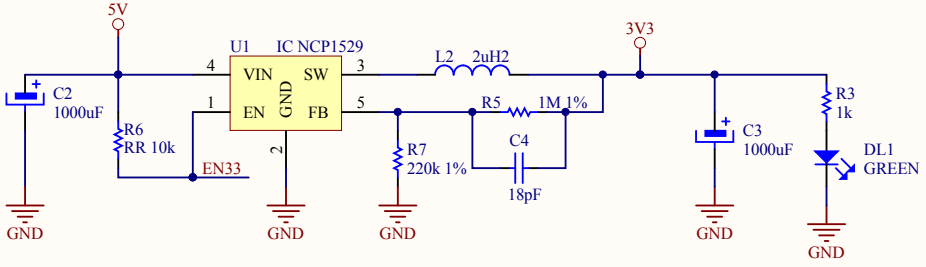

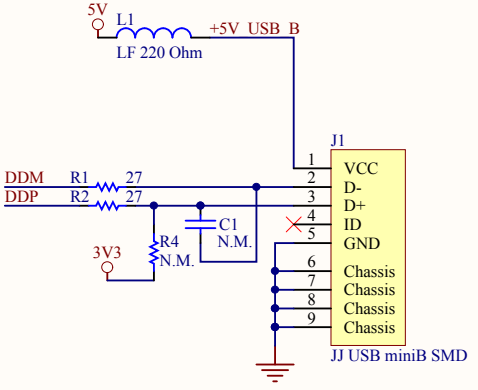

Fid
Fid 1

Fid
Fid 2

Title	***PS3V3***		*ACME Systems srl*
Size: A4	Number:	Revision: 1	
Date: 11/22/2012	Time: 4:41:15 PM	Sheet 1 of 1	*www.acmesystems.it*
File: C:\ACME_Projects\Altium\altium-common\PS3V3\PS3V3.SchDoc			

ACME SYSTEMS